An EFCO Company

SWAPLOADER®

"Hooked on Quality" U.S.A. LTD.

200 SERIES 53 7/8" SUB-FRAME CRITICAL DIMENSIONS

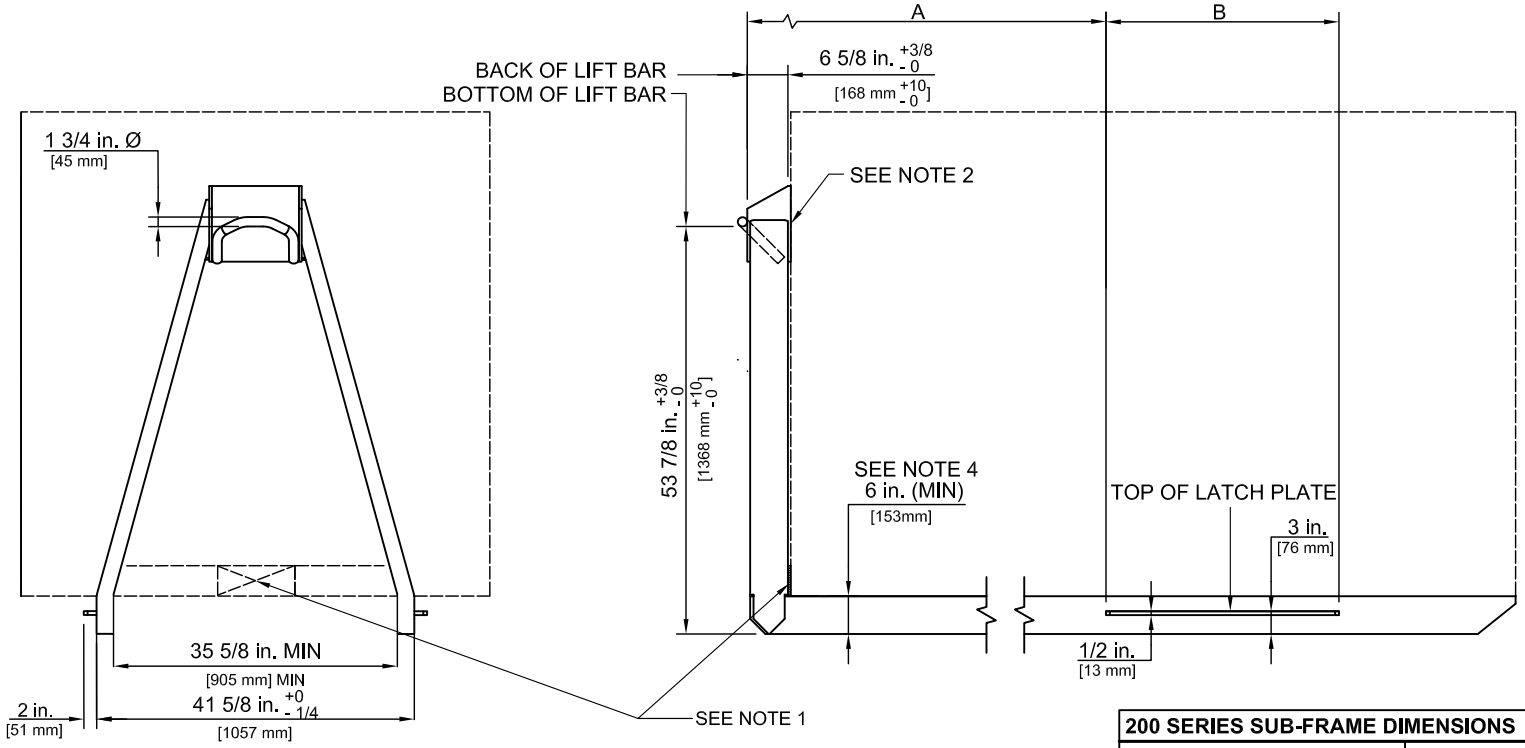

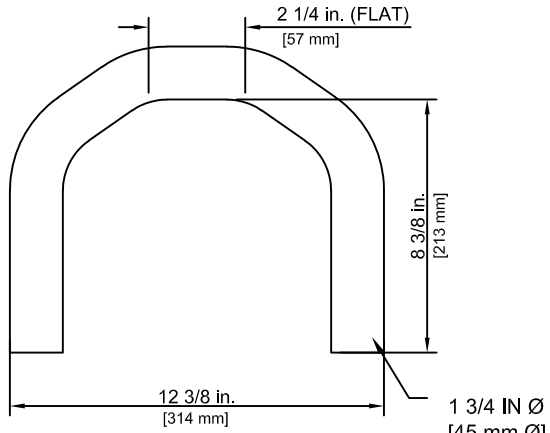

LIFT BAR DETAIL

200 SERIES SUB-FRAME DIMENSIONS		
HOIST COMPATABILITY	**A**	**B**
SL-2418HD	84 1/8" [2137 mm]	24" [610 mm]
SL-225	110 3/4" [2813 mm]	36" [915 mm]
SL-160/180/185/212/214/240	111 3/4" [2839 mm]	48" [1220 mm]
SL-205	122 3/4" [3118 mm]	36" [915 mm]
SL-220/222	123 3/4" [3143 mm]	48" [1220 mm]

NOTES

1.) A STRUCTURAL JIB CONTACT POINT LOCATED AS LOW AS ALLOWABLE ON THE FRONT OF THE BODY IS REQUIRED.

2.) WELD HOOK GUARD TO BODY OR ADD STRUCTURAL SUPPORT AS NEEDED FOR THE APPLICATION.

3.) THIS DRAWING PROVIDES THE CRITICAL SUB-FRAME DIMENSIONS FOR COMPATABILITY WITH THE SWAPLOADER HOOK LIFT HOIST. IT IS THE SUB-FRAME SUPPLIERS RESPONSIBILITY TO PROVIDE A SUB-FRAME OF SUFFICIENT CAPACITY WHICH PROPERLY SUPPORTS THE BODY/CONTAINER WHEN USED WITH THE HOOK LIFT HOIST.

4.) SWAPLOADER MANUFACTURED 200 SERIES A-FRAMES REQUIRE A 6 INCH LONGSILL HEIGHT.

SWAPLOADER™ U.S.A. LTD.

TITLE		
200 SERIES SUB-FRAMES		
DRAWING NO.	MODEL NO.	REV
S-934		I

S-934 6/8/23